SUNRISE MEDICAL

QUICKIE®

Quickie® POWER TILT

Supplier: This manual must be given to the rider of this wheelchair.

Rider: Before using this wheelchair read this entire manual and save for future reference.

Owner's Manual

Quickie® POWER TILT

Distribuidor: Este manual debe ser entregado al pasajero de esta silla de ruedas.

Pasajero: Antes de usar esta silla de ruedas, lea este manual en su totalidad y guárdelo para futura referencia.

Manual de Instrucciones

Cada una de las sillas se envía con un manual de instrucciones en inglés. El manual en español francés está disponible en formato PDF en nuestra página en Internet: www.SunriseMedical.com. Ingrese a la página del producto específico para descargar el manual, comuníquese con el proveedor autorizado de Sunrise Medical.

Quickie® POWER TILT

Au Fournisseur: Ce manuel doit être remis à l'usager de ce fauteuil roulant.

À l'Usager: Veuillez lire tout le manuel et le conserver pour référence ultérieure.

Manuel d 'instructions

Chaque fauteuil est livré avec un manuel d'instructions en anglais. Les versions en espagnol et en français sont à votre disposition en format PDF sur le site : www.SunriseMedical.com. Veuillez vous rendre à la page de votre produit pour télécharger le manuel dans la langue souhaitée, ou contactez un fournisseur agréé Sunrise Medical.

P/N 252999 Rev. B

Instructions for Use

Power Tilt

SUNRISE MEDICAL LISTENS

Thank you for choosing a Quickie product. We want to hear your questions or comments about this manual, the safety and reliability of your device, and the service you receive from your Sunrise dealer. Please feel free to write or call us at the address and telephone number below:

SUNRISE MEDICAL (US) LLC
Customer Service Department
12002 Volunteer Blvd.
Mount Juliet, TN 37122, USA
(800) 333-4000

www.SunriseMedical.com/register

Be sure to return your warranty card, and let us know if you change your address. This will allow us to keep you up to date with information about safety, new products and options to increase your use and enjoyment of the wheelchair. If you lose your warranty card, call or write and we will gladly send you a new one.

You can also register your product at:
www.SunriseMedical.com/register

FOR ANSWERS TO YOUR QUESTIONS
Your authorized dealer knows your device best, and can answer most of your questions about device safety, use and maintenance.

For future reference, please fill in the following:

Dealer: _____

Address: _____

Telephone: _____

Serial #: _____ Date/Purchased: _____

ADDITIONAL INFORMATION YOU SHOULD KNOW

No component of this chair was made with Natural Rubber Latex.

DISPOSAL AND RECYCLING INFORMATION

When this product reaches the end of its life, please take it to an approved collection or recyling point designated by your local or state government. This product is manufactured using a variety of materials. Your product should not be disposed of as ordinary household waste. You should dispose of your product properly, according to local laws and regulations. Most materials that are used in the construction of this product are fully recyclable. The separate collection and recyling of your product at the time of disposal will help conserve natural resources and ensure that it is disposed in a manner that protects the environment.

Ensure you are the legal owner of the product prior to arranging for the product disposal in accordance with the above recommendations.

II. TABLE OF CONTENTS

I. INTRODUCTION 2
II. TABLE OF CONTENTS 3
III. YOUR UNIT AND ITS PARTS 4
IV. NOTICE — READ BEFORE USE 5
A. Choose the Right Device 5
B. Review This Manual Often 5
C. Warnings 5
V. EMI (ELECTROMAGNETIC INTERFERENCE) 6
A. What is EMI? 6
B. What effect can EMI have? 6
C. Sources of EMI 6
D. Distance from the source 6
E. Immunity level 6
F. Report all suspected EMI incidents 6
G. EMI from device 6
VI. GENERAL WARNINGS 7
A. Weight Limits 7
B. Intended Use 7
C. Attendants and Caregivers 7
D. Accessories 7
E. Know your device 7
F. Reduce the risk of an accident 7
G. Safety checklist 7
H. Changes and adjustments 7
I. Environmental conditions 7
J. Power On/Off 7
K. Anti-tip Tubes 7
L. Fasteners 8
VII. BATTERY AND CHARGER 8
A. Introduction 8
B. Battery Types 8
C. Charging 8
D. Battery Storage 8
E. Low Battery Levels 8
F. Battery Safety 8
G. Checking the Battery 8
H. Charger Safety 8
XIII. USE AND MAINTENANCE 9
A. Introduction 9
B. Important Safety Checks 9
C. Cleaning 9
D. Storage Tips 9
E. Safety Checklist 9
F. Troubleshooting Chart 9
G. Check-out 9
IX. OPERATING INSTRUCTIONS 10
A. Power Tilt ready 10
B. Operating conditions 10
X. DEALER SERVICE AND ADJUSTMENT 11
A. Dealer Service Introduction 11
B. Important Maintenance Tips 11
C. Cleaning 11
D. Inspect 11
XI. SUNRISE LIMITED WARRANTY 11

III. YOUR UNIT AND ITS PARTS

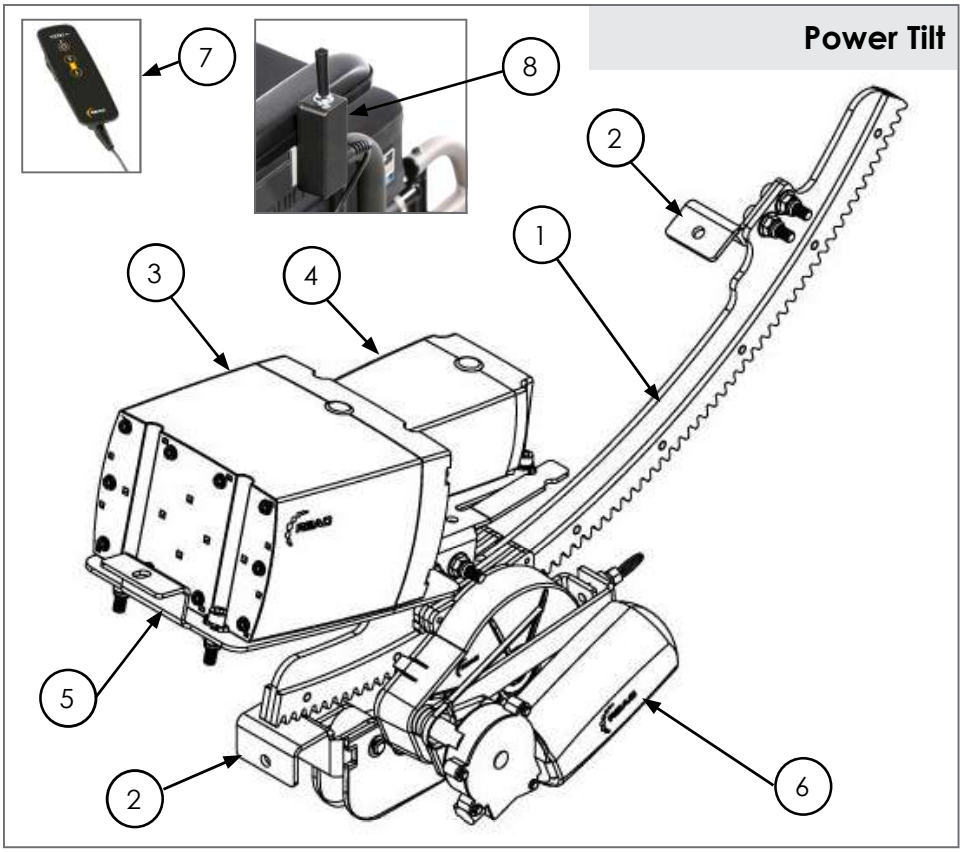

1. Drive Rack Assembly
2. Attaching Brackets
3. Battery Box
4. Control Box
5. Plate
6. Motor Unit
7. Remote
8. Toggle switch with cable
9. Required Hardware (not shown)
10. Strut Adapter with hardware (not shown)
11. Connection cord (not shown)

NOTE: All features may not be available with some chair setups or in conjunction with another chair feature. Please consult your authorized dealer for information.

NOTE: The Power Tilt is designed to fit on a variety of Quickie wheelchairs. For information concerning a specific chair, please contact Sunrise Medical customer service, or consult the owner's manual for that chair.

POWER TILT SPECIFICATIONS

Unit Weight:
16.5 lbs (7.5 kgs)

Color:
Black and Orange

Power Tilt Unit:
Model Type - RCB11
Rated Voltage - 24V

Battery:
Model type: Lead Acid
Nominal Voltage: Two 12 Volt batteries connected in series, 24 V
Nominal Capacity: 2.9 Ah (20 HR Ratio)
Weight: 5.3 lbs (2.4 kg)

Charger:
Model type: Mascot Type 224 24V Lead Acid
Input Voltage: 100 - 240V AC
Input Frequency: 50/60 Hz
Input Current: 0.35 A
Range of Temperature at start of charging: 0° to 40°C (Battery Temp)
Charging time: Approximately 6 hours

IV. NOTICE — READ BEFORE USE

A. CHOOSE THE RIGHT DEVICE

This product is intended for single person use only. Final selection of the type of wheelchair, options and adjustments that are used with the Power Tilt Technology rests solely with you and your health care professional. Choosing the best chair for your unique mobility needs, will depend on such things as:

1. Your disability, grasping strength, balance and coordination.
2. The types of hazards you must overcome in daily use (where you live and work, and other places you are likely to use your chair).

INTENDED USE OF DEVICE: The Power Tilt is intended to provide mobility and power tilt to persons restricted to a sitting position.

B. REVIEW THIS MANUAL OFTEN

Before using this device you, and each person who may assist you, should read this entire manual and make sure to follow all instructions. Review the warnings often, until they are second nature to you.

C. WARNINGS ⚠

The word "WARNING" refers to a hazard or unsafe practice that may cause severe injury or death to you or to other persons. The "Warnings" are in three main sections, as follows:

1. V - EMI
   Here you will learn about electromagnetic interference and how it can affect your device.
2. VI - GENERAL WARNINGS
   Here you will find a safety checklist and a summary of risks you need to be aware of before you operate your device.
3. VII - BATTERY AND CHARGER
   Here you will learn about battery and charger safety, and how to avoid injury.

Throughout this owner's manual and on the device you will see the icons listed below to identify warnings and potential hazards.

ESD: Electrostatic Discharge can damage printed circuit boards.

NOTE - Where they apply, you will also find "Warnings" in other sections of this manual. Heed all warnings in these sections. If you fail to do so a fall, tip-over or loss of control may occur and cause severe injury to the rider or others.

V. ELECTROMAGNETIC INTERFERENCE

A. WHAT IS EMI?

⚠ WARNING

1. EMI means: electromagnetic (EM) interference (I). EMI comes from radio wave sources such as radio transmitters and transceivers. (A "transceiver" is a device that both sends and receives radio wave signals).
2. There are a number of sources of intense EMI in your daily environment. Some of these are obvious and easy to avoid. Others are not, and you may not be able to avoid them.
3. Powered accessories attached to manual wheelchairs may be susceptible to Electromagnetic interference (EMI) emitted from sources such as radio stations, TV stations, amateur radio (HAM) transmitters, two way radios, and cellular phones.
4. EMI can also be produced by conducted sources or electrostatic discharge (ESD).

B. WHAT EFFECT CAN EMI HAVE?

⚠ WARNING

1. EMI can cause your power accessory, without warning, to:
   - Move by itself

   If any of these occur, it could result in severe injury to you or others.
2. EMI can damage the control system of your chair. This could create a safety hazard, and lead to costly repairs.

C. SOURCES OF EMI

⚠ WARNING

The sources of EMI fall into three broad types:

1. Hand-Held Transceivers:
   The antenna is usually mounted directly on the unit. These include:
   - Citizens band (CB) radios
   - "Walkie-talkies"
   - Security, fire and police radios
   - Mobile phones
   - Lap-top computers with phone or fax
   - Other personal communication devices
   - Electronic article surveillance systems

   NOTE: These devices can transmit signals while they are on, even if not in use.
2. Medium-Range Mobile Transceivers:
   These include two-way radios used in police cars, fire trucks, ambulances and taxi cabs. The antenna is usually mounted on the outside of the vehicle.
3. Long-Range Transceivers:
   These include commercial radio and TV broadcast antenna towers and amateur (HAM) radios.
   NOTE - The following are not likely to cause EMI problems: Lap-top computers (without phone or fax), Cordless phones, TV sets or AM/FM radios, CD or tape players.

D. DISTANCE FROM THE SOURCE

⚠ WARNING

Electro-magnetic energy rapidly becomes more intense as you get closer to the source. For this reason, EMI from hand-held devices is of special concern. A person using one of these devices can bring high levels of EM energy very close to your chair without you knowing it.

E. IMMUNITY LEVEL

⚠ WARNING

1. The level of EM is measured in volts per meter (V/m). Every power tilt device can resist EMI up to a certain level. This is called its "immunity level".
2. The higher the immunity level, the less the risk of EMI. It is believed that a 20 V/m immunity level will protect the power tilt user from the more common sources of radio waves.

⚠ WARNING

If there is any doubt that the specialty control input device is not immune to 20V/m, extra care should be taken around known sources of EMI.

⚠ WARNING

There is no way to know the effect on EMI if you add accessories or modify this chair. Any change to your chair may increase the risk of EMI. Parts not specifically tested or parts from other suppliers have unknown EMI properties.

F. REPORT ALL SUSPECTED EMI INCIDENTS

⚠ WARNING

You should promptly report any unintended movement. Be sure to indicate whether there was a radio wave source near your chair at the time. Contact:
Sunrise Medical, Customer Service Department at (800) 333-4000.

G. EMI FROM DEVICE

⚠ WARNING

The device itself can disturb the performance of electromagnetic fields such as emitted by alarm systems of shops.

⚠ WARNING

Heed all warnings to reduce the risk of unintended device movement:

1. Beware of the danger from hand-held transceivers. Never turn on or use a hand-held transceiver while power to your device is on. Use extra care if you believe that such a device may be in use near your chair.
2. Be aware of nearby radio or TV stations, and avoid coming close to them.
3. If unintended movement occurs, turn your device off as soon as it is safe to do so.

VI. GENERAL WARNINGS

A.WEIGHT LIMITS

⚠ WARNING

NEVER exceed the weight limit specified by Sunrise Medical. The weight capacity provided by your manufacturer is for the combined weight of a rider and items carried using on-board storage. If you do exceed the weight limit, damage to your chair, a fall, tip-over or loss of control may occur and cause severe injury to the rider or others.

The maximum weight capacity for the Power Tilt is 400 lbs (181 kg).

⚠ WARNING

If the maximum weight limit for your chair is lower than 400 lbs (181 kg), do not exceed the stated weight limit for your chair.

B. INTENDED USE

The wheelchairs on which the Power Tilt has been installed, empower physically challenged persons by providing a means of enhanced mobility. This owner's manual refers to the power tilt accessory only. For warnings and information about the correct use and care of your specific wheelchair, please refer to the owner's manual provided with that specific chair.

⚠ WARNING

DO NOT use this device for purposes other than what is intended by the manufacturer. Unauthorized modifications and use of parts or accessories not supplied or approved by Sunrise Medical may change the chair structure. This will void the warranty and may cause a safety hazard. If the warning is ignored, damage to your chair, and the potential for severe injury of the person using the chair for unintended purposes can occur.

C. ATTENDANTS AND CAREGIVERS

⚠ WARNING

Before you assist a rider, be sure to read all warnings contained in this manual, and follow all instructions that apply. Be aware that after consulting a healthcare professional, you will need to learn safe and proven body mechanics to use and create assistive methods best suited to your abilities.

D. ACCESSORIES

⚠ WARNING

Unauthorized modifications or use of parts, or accessories not supplied or approved by Sunrise Medical may change the chair structure. This will void the warranty and may cause a safety hazard.

Some problems that may occur, but are not limited to:

1. Any modification or disassembly can potentially create an unsafe situation where rider and/or attendant are put at risk.

E. KNOW YOUR DEVICE

⚠ WARNING

Take the time to learn the feel of this device before you begin the tilt.

F. REDUCE THE RISK OF AN ACCIDENT

⚠ WARNING

1. BEFORE you begin riding, you should be trained in the safe use of this device by your health care advisor.
2. Be aware that you must develop your own methods for safe use best suited to your level of function and ability.
3. NEVER try a new maneuver on your own. Ask the advice of your health care professional to lower the risk of a fall or tip over.
4. Get to know the areas where you plan to use your device. Look for hazards and learn how to avoid them.

G. SAFETY CHECKLIST

⚠ WARNING

Before Each Use Of Your Device:

1. Make sure the chair tilts easily and that all parts work smoothly. Check for noise, vibration, or a change in ease of use. (This may indicate low battery, loose fasteners, or damage to your chair).
2. Inspect for any problems. Your authorized dealer can help you find and correct the problem(s).
3. Check to see that motor pin is engaged and not in the manual position.
4. If your chair has anti-tip tubes, lock them in place.

H. CHANGES & ADJUSTMENTS

⚠ WARNING

1. See your healthcare professional and have them re-assess the basic fit and performance measurements, and adjust seating components when the Power Tilt is added to an existing chair.
2. Unauthorized modifications or use of parts not supplied or approved by Sunrise Medical may change the chair structure. This will void the warranty and may cause a safety hazard.
3. If you fail to heed these warnings, damage to your chair, a fall, tip-over or loss of control may occur and cause severe injury to the rider or others.

I. ENVIRONMENTAL CONDITIONS

⚠ WARNING

1. Use extra care if you must expose the Power Tilt to wet or cold conditions.
2. Contact with water or excess moisture may cause your chair to rust or corrode. Electronic components may also be affected. Avoid all extreme weather situations if possible.
   a. Do not use your device in a shower, pool or other body of water, or use a sprayer to wash it. The parts are not watertight and may rust or corrode from the inside.
   b. Avoid excess moisture (for example, do not leave the unit in a damp bathroom while taking a shower).
   c. Dry your device as soon as you can if it gets wet, or if you use water to clean it.

If you fail to heed these warnings, damage to your chair, a fall, tip-over or loss of control may occur and cause severe injury to the rider or others.

J. POWER ON/OFF

⚠ WARNING

Do not remove the battery while the power tilt is in operation, this will cause an unsafe situation. Turn off the power switch in crowded or unpredictable situations where someone might bump or push the user control switch, causing the wheelchair to tilt unexpectedly.

K. ANTI-TIP TUBES

⚠ WARNING

Anti-tip tubes can help keep your chair from tipping over backward in normal conditions. If your chair includes anti-tip tubes be sure to re-adjust them after adding the Power Tilt to the chair.

1. Sunrise recommends the use of anti-tip tubes.
2. Ensure anti-tip tubes are set and adjusted per the wheelchair manufacturer's recommendations.

If you fail to heed these warnings damage to your device, a fall, tip-over or loss of control may occur and cause severe injury to the rider or others.

L. FASTENERS

⚠ WARNING

Many of the screws, bolts and nuts on this chair are special high-strength fasteners. Use of improper fasteners may cause your chair to fail.

1. ONLY use fasteners provided by an authorized dealer (or ones of the same type and strength, as indicated by the markings on the heads).
2. Over- or under-tightened fasteners may fail or cause damage to chair parts.
3. If bolts or screws become loose, tighten them as soon as you can.

NOTE- For safety and optimum performance it is best to not reuse fasteners.

VII. BATTERY AND CHARGER

A. INTRODUCTION

1. **Battery Notes–**
   - Batteries supply the power for your chair. They contain a finite amount of energy and have limits on how long they can store and supply energy.
   - You can charge batteries only a certain number of times before they will fail and no longer hold a charge.
   - Disconnecting the battery to control cable will cause the system to power off. If this occurs the system must be connected to the battery charger to reset before use.
   - For answers to questions about batteries, consult your authorized dealer.
2. **Use Proper Batteries:**
   Your chair operates on one battery.
   - Use the battery supplied with the unit.
   - When you buy a replacement, purchase the same kind of battery that was supplied with the unit.
3. Before removing the battery:
   - Turn off the Power switch.
   - Disconnect the battery by pulling it out of the cradle.

B. BATTERY TYPES

The Power Tilt utilizes Lead Acid batteries:

1. Lead Acid comes with its own charging system. Do not use a charger other than the one provied with your specific battery. Damage to the battery, and/or the charger unit can occur if using a charging unit other than what was provided by the manufacturer.

C. CHARGING

Lead Acid charging notes:

Charging is indicated by a red light on the charger. Once charging is complete, the light will be solid green on the charger. Charging is also indicated by three flashing lights on the attendant toggle switch.

IMPORTANT: if the yellow light with the exclamation point is lit, check to make sure all cords are properly installed. If issue continues, contact your authorized dealer.

D. BATTERY STORAGE

⚠ WARNING

Never store the battery in direct sunlight or outdoors.

E. LOW BATTERY LEVELS

⚠ WARNING

ALWAYS be aware of the battery life. Check it frequently. The power tilt function will switch off. You must charge the battery. Power tilt will be disabled while charging.

Manual tilt can be accomplished by pulling the motor disconnect pin (A) (Fig 7.1). Two people must be present to assist in this adjustment. One person must support the back of the chair by using the grab handles on the back canes to prevent a sudden drop while the other pulls the motor disconnect pin on the power assembly.

Battery level indicator on the attendant toggle switch includes a low battery level warning light (Fig 7.2).

F. BATTERY SAFETY

⚠ WARNING

The battery on the Power Tilt is not very large but stores a large amount of charge. Improper use can cause damage or in certain circumstances lead to burns or fire.

- Only use battery for the intended purpose of power tilt for a wheelchair.
- Keep the battery out of reach of children and anyone who is not familiar with it.
- If the battery housing is damaged, a corrosive liquid (KOH) can be emitted. Avoid any contact with the skin and discontinue use, if you notice any damage to your unit.
- Do not expose the battery to impact; do not add or remove parts to the battery.
- Do not expose the battery to heat or place near fire or water.
- Do not use a broken or damaged battery.
- Do not disassemble or modify the battery.
- Do not charge or store the battery near pets or children.

G. CHECKING THE BATTERY

The battery capacity and charging progress is shown when the display key is pressed. The total capacity is shown by LED indicator lights. Each light represents about 33% of the total capacity of the battery. The display is active while the unit is powered on.

H. CHARGER SAFETY

⚠ WARNING

The charger for the Power Tilt is a very sensitive piece of equipment. Improper use can cause damage or in certain circumstances lead to burns or fire.

- When charging always use the charger supplied.
- Always charge on a level surface. After use do not keep it plugged into the power outlet
- Keep the charging unit out of reach of children and anyone who is not familiar with it.
- Do not use a charger if it has a damaged cord, or if it has been dropped.

VIII. USE AND MAINTENANCE

⚠ WARNING

The owner of this unit is responsible for making sure that it has been set up and adjusted by a trained service professional under the advice of a healthcare professional. The unit may require periodic safety and function checks or certain in-use adjustments that can be performed by the owner, caregiver or authorized dealer if desired. Always use parts and/or accessories that have been recommended or approved by Sunrise Medical when servicing this unit.

A. INTRODUCTION

1. Proper maintenance will improve performance and extend the useful life of this unit.
2. Clean your unit regularly. This will help you find loose or worn parts and make your unit easier to use. You will need a mild detergent solution and plenty of cleaning rags.
3. If discovered, have loose, worn, bent or damaged parts replaced before using unit.
4. To protect your investment, have all major maintenance and repair work done by your authorized dealer.
5. Inspect and maintain this unit strictly per the safety checklist.
6. If you detect a problem, make sure to order parts, or have service, and repair work done at your authorized dealer before use.
7. At least once per year, have a complete inspection, safety check, and service of your unit made by an authorized dealer.

B. IMPORTANT SAFETY CHECKS

1. Cable connections:
   Check cable connections once per week. The power tilt will not function if cables are loose or improperly connected.
2. Motor pin engagement:
   Check motor pin engagement once per week or after motor is disengaged to ensure the pin is in the proper position and fully engaged.
3. Cable routing
   Check cable routing once per week to prevent cables becoming pinched or tangled with moving parts.

C. CLEANING

1. Device Surface
   a. Clean the device surface with mild soap or detergent at least once a month.
2. Axles and Moving Parts
   a. Clean around axles and moving parts WEEKLY with a slightly damp (not wet) cloth.
   b. Wipe off or blow away any fluff, dust or dirt on axles or moving parts.
3. Basic Maintenance Materials available at local store
   a. Tire pump
   b. Tire pressure gauge
   c. Clean rags or cotton cloth.
   d. Mild detergent.

NOTE - You do not need to grease or oil the unit.

D. STORAGE TIPS

1. Optimal storage temperature is between 50°F and 77°F.
2. Store your unit in a clean, dry area. If you fail to do so, parts may rust or corrode.
3. Before using your unit, make sure it is in proper working order.
4. Inspect and service all items on the "Maintenance Chart".
5. If stored for more than three months, have your unit inspected by an authorized dealer before use.
6. When not in use the battery should be recharged every three months to ensure optimum performance after being stored.

E. SAFETY CHECKLIST

Weekly	3 Months	6 Months	Annually	Safety & Function Check
☑				Battery level
☑				Wheel locks
☑				Visually check for loose hardware
☑				Motor pin engagement
	☑			Quick-release axles
	☑			Wheels, tires, and spokes
	☑			Anti-tip tubes
☑				Cable connection
☑				Cable routing
			☑	**Service by authorized dealer**

NOTE - The user or caregiver should perform these weekly and monthly checks to maintain the safety of their unit. If an item is not working properly, please contact your authorized dealer.

F. TROUBLESHOOTING CHART

Chair won't tilt	Shortage of power	Squeaks and rattles	Solution
☑	☑	☑	• Make sure all cables are connected properly and routed so that they will not be pinched, cut or trapped by moving components or obstruct tilt movement.
	☑	☑	• Make sure all nuts and bolts are tight.
☑	☑	☑	• Check battery, charge battery, reset the power on the unit.

G. CHECK-OUT

After assembly and placement of the Power Tilt it should operate smoothly and easily. If you have any problems, follow these procedures:

1. Review the check-out sections and operating guide to make sure chair was properly prepared.
2. Review the Troubleshooting Chart at the beginning of this section.
3. If your problem persists, contact your authorized dealer. If you still have a problem after contacting your authorized dealer, contact Sunrise Medical customer service. See the Introduction Page for details on how to contact your authorized dealer or Sunrise Medical customer service.

A. POWER TILT READY

When device is attached and powered on ready to use.

1. Make sure the motor assembly pin is engaged by confirming the pin is in position A (Fig 10.1).
2. Review Fig 10.2 to understand how to use the attendant toggle switch.
3. Using the user toggle switch:
   - pushing forward on the toggle switch will cause the chair to tilt (Fig 10.3)
   - pulling backward on the toggle switch will cause the chair to return to an upright position (Fig 10.3)
   - continue to hold either the attendant toggle switch or user toggle switch until tilt position is achieved
   - letting go of the control will stop the motor and the chair will stay in tilted position
   - turning off the attendant control will turn off the module; the attendant contol will need to be powered on for the module to work

Note: the user toggle switch will not come mounted on chair, as airmrests are removed for shipping. It will need to be attached at delivery. The user toggle switch will mount either vertical or horizontal using two BHCS M6x10 bolts.

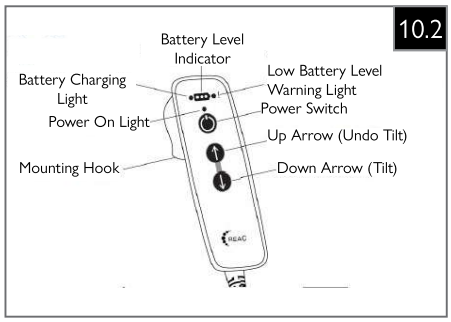

B. OPERATING CONDITIONS

1. Circumstances when user should power off their device:
   a. During transport
   b. Any situation where unexpected tilting movement of the chair will put the user in an unsafe position.

X. DEALER SERVICE AND ADJUSTMENT

⚠ WARNING

The owner of this unit is responsible for making sure that it has been setup and adjusted by a trained service professional. Service and/or adjustments should only be done by a professional. Always use parts and/or accessories that have been recommended and approved by Sunrise Medical when servicing this unit.

A. DEALER SERVICE INTRODUCTION

1. At least once per year, this unit should have a complete inspection, safety check, and regular service made by an authorized dealer.
2. Torque settings– A torque setting is the optimum tightening which should be made on a particular fastener. It is important to use proper torque settings where specified. When not specified, torque settings should be 62 in-lbs (7 Nm).
3. If you have discovered a worn, bent, or damaged part, repair or replace them with recommended parts before returning this unit to service.
4. All major maintenance and repair work should be done by an authorized dealer

B. IMPORTANT MAINTENANCE TIPS

1. Torque settings:
   A torque setting is the optimum tightening which should be made on a particular fastener. It is important to use proper torque settings where specified. When not specified, torque settings should be 62 in-lbs (7 Nm).

   Dealer service and adjustment reference materials:
   For help with maintenance go to www.sunrisemedical.com for parts manuals, owner's manuals, and instruction sheets that will aid in the repair and maintenance of the Power Tilt.

   You may also refer to the following documents:
   - Your wheelchair owner's manual

C. CLEANING

1. Device Surface
   a. Clean the device surface with mild soap or detergent.
2. Moving Parts
   a. Clean around gear teeth and moving parts with a slightly damp (not wet) cloth.
   b. Wipe off or blow away any fluff, dust or dirt on gear teeth or moving parts.

D. INPSECT

Final inspection instructions:
After the unit is assembled and adjusted, it should tilt smoothly and easily. All accessories should also perform smoothly. If you have any problems, follow these procedures:

1. Review the check-out sections and operating guide to make sure the unit was properly prepared, and assembled correctly on your chair.
2. Review any troubleshooting information in this manual.
3. If you determine that a problem exists, contact your authorized dealer. If you still have a problem after contacting your authorized dealer, contact Sunrise customer service. See the Introduction Page for details on how to contact your authorized dealer or Sunrise customer service.

XI. SUNRISE LIMITED WARRANTY

A. FOR ONE (1) YEAR

Power unit, charger, and components:

1. During this warranty period, if there is a material or manufacturing defect in the Power Tilt, the defective parts will be replaced or repaired. An invoice, as proof of purchase, may be required.
2. This warranty does not apply if:
   a. The product is subject to abuse.
   b. The product is not maintained as recommended in the owner's manual.
   c. The product is transferred to a different person from the original owner.

B. LIMITATIONS

1. We do not warrant:
   a. Consumable parts such as tires, tubes, and battery.
   b. Damage from neglect, accident, misuse, or from improper installation or repair.
   c. Products modified without Sunrise Medical's express written consent.
   d. Damage from exceeding the weight limit.
2. This warranty is VOID if the original serial number tag is removed or altered.
3. This warranty applies in the USA and Canada only. Check with your authorized dealer to find out if international warranties apply.
4. This warranty is not transferable and only applies to the first consumer purchase of this product through an authorized Sunrise Medical dealer.

Record your serial number here for future reference:

_____

C. WHAT WE WILL DO

Our sole liability is to repair or replace covered parts. This is the exclusive remedy for consequential damages.

D. WHAT AUTHORIZED DEALER MUST DO

1. Obtain from Sunrise Medical, while this warranty is in effect, prior approval for return or repair of covered parts. Contact Customer Service for a Returned Material Authorization (RMA) number and information as to where to return the product.

E. NOTICE TO CONSUMER

1. You must pay the cost of labor to repair, remove or install parts even if they are covered under warranty.
2. If allowed by law, this warranty is in place of any other warranty (written or oral, express or implied, including a warranty of merchantability, or fitness for a particular purpose).
3. This warranty gives you certain legal rights. You may also have other rights that vary from state to state or province to province.

F. ADDITIONAL WARRANTY INFORMATION

For goods provided by Sunrise Medical Pty Ltd in Australia, our goods come with a guarantee by Sunrise that cannot be excluded under the Australian Consumer Law. You are entitled to a replacement or refund for a major failure and for compensation for any other reasonably foreseeable loss or damage. You are also entitled to have the goods repaired or replaced if the goods fail to be of acceptable quality and the failure does not amount to a major failure. The benefits to you given by this warranty are in addition to your other rights and remedies under a law in relation to the goods to which the warranty relates.

Sunrise Medical S.r.l.
Via Riva, 20 – Montale
29122 Piacenza
Italia
Tel.: +39 0523 573111
www.SunriseMedical.it

Sunrise Medical AG
Erlenauweg 17
CH-3110 Münsingen
Schweiz/Suisse/Svizzera
Tel +41 (0)31 958 3838
www.SunriseMedical.ch

Sunrise Medical AS
Delitoppen 3
1540 Vestby
Norge
Telefon: +47 66 96 38 00
post@sunrisemedical.no
www.SunriseMedical.no

Sunrise Medical AB
Neongatan 5
431 53 Mölndal
Sweden
Tel.: +46 (0)31 748 37 00
post@sunrisemedical.se
www.SunriseMedical.se

MEDICCO s.r.o.
H – Park, Heršpická 1013/11d,
639 00 Brno
Czech Republic
Tel.: (+420) 547 250 955
Fax: (+420) 547 250 956
www.medicco.cz
info@medicco.cz
Bezplatná linka 800 900 809

Sunrise Medical Aps
Mårkærvej 5-9
2630 Taastrup
Denmark
+45 70 22 43 49
info@sunrisemedical.dk
www.SunriseMedical.dk

Sunrise Medical Australia
11 Daniel Street
Wetherill Park NSW 2164
Australia
Ph: +61 2 9678 6600
Email: enquiries@sunrisemedical.com.au
www.SunriseMedical.com.au

Sunrise Medical (US) LLC
North American Headquarters
12002 Volunteer Blvd.
Mount Juliet, TN 37122, USA
(800) 333-4000
(800) 300-7502
www.SunriseMedical.com

Sunrise Medical GmbH
Kahlbachring 2-4
D-69254 Malsch
Deutschland
Tel.: +49 (0) 7253/980-0
Fax: +49 (0) 7253/980-222
www.SunriseMedical.de

Sunrise Medical Ltd.
Thorns Road
Brierley Hill
West Midlands
DY5 2LD
England
Phone: 0845 605 66 88
Fax: 0845 605 66 89
www.SunriseMedical.co.uk

Sunrise Medical S.L.
Polígono Bakiola, 41
48498 Arrankudiaga – Vizcaya
España
Tel.: +34 (0) 902142434
Fax: +34 (0) 946481575
www.SunriseMedical.es

Sunrise Medical Poland
Sp. z o.o.
ul. Elektronowa 6,
94-103 Łódź
Polska
Telefon: + 48 42 275 83 38
Fax: + 48 42 209 35 23
E-mail: pl@sunrisemedical.de
www.Sunrise-Medical.pl

Sunrise Medical B.V.
Defensiedok 20
3433 NE Nieuwegein
The Netherlands
T: +31 (0)30 – 60 82 100
F: +31 (0)30 – 60 55 880
E: info@sunrisemedical.nl
www.SunriseMedical.nl

Sunrise Medical HCM B.V.
Vossenbeemd 104
5705 CL Helmond
The Netherlands
T: +31 (0)492 593 888
E: customerservice@sunrisemedical.nl
www.SunriseMedical.nl
www.SunriseMedical.eu (International)

Sunrise Medical S.A.S
ZAC de la Vrillonnerie
17 Rue Mickaël Faraday
37170 Chambray-Lès-Tours
Tel : + 33 (0) 2 47 55 44 00
Email: info@sunrisemedical.fr
www.SunriseMedical.fr

Sunrise Medical Canada Inc.
1000 Creditstone Rd., Unit #2
Concord, ON, L4K 4P8
Canada
Phone: 1-800-263-3390
Fax: 1-800-561-5834
www.SunriseMedical.ca

© 2025 Sunrise Medical (US) LLC
252999 Rev. B